XT8000EFI

Commercial/Residential Portable Generator

Model 7162-0 UPC: 696471072709
Model 7162-1 UPC: 696471074505
Model 7162-2 UPC: 696471074505
(50-State/EPA/CARB)

Features

- **Generac Electronic Fuel Injected (EFI) Engine**
  - **Effortless Startup**, automotive technology allows for easy and reliable starting.
  - **Built for Long-Term Storage**, engineered to reduce bad gas problems during storage.
  - **Responsive Load Pickups**, electronic engine control delivers reliable power.
- **True Power™ Technology** provides clean, stable power ideal for sensitive electronics, tools and appliances.
- **Idle Control** reduces noise and conserves fuel for extended run-times.
- **Low-oil shutdown** automatically safeguards engine from damage.
- **PowerBar™** easily monitors power usage.
- **Hour meter** tracks usage and monitors maintenance cycles.
- **Large-capacity steel fuel tank** with incorporated fuel gauge provides durability and extended run times.
- **Covered outlets** provide added protection from the environment and rugged working conditions.
- **All-terrain, never flat wheels and fold-down locking handle** for reliable portability and compact storage.
- **Controlguard™** provides added protection to the control panel.

AC Rated Output Running Watts 8000
AC Maximum Output Starting Watts 10000

Control Panel

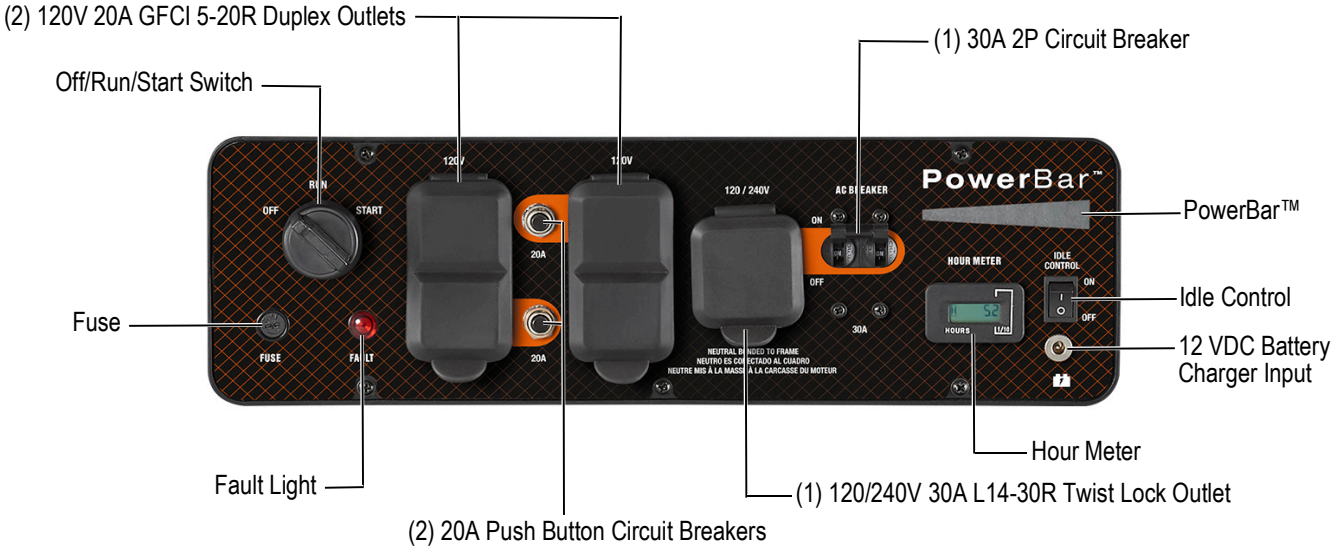

GENERAC®

XT8000EFI

Specifications

Model (Configuration)	7162-0 / 7162-1 / 7162-2 (50-State/EPA/CARB)
AC Rated Output Running Watts	8000
AC Maximum Output Starting Watts	10000
Rated AC Voltage	120/240 VAC
Rated AC Frequency	60 Hz
Rated 120/240 VAC Amperage	66.6/33.3
Max 120/240 VAC Amperage	83.3/41.6
Engine Displacement	459cc
Engine Type	Electronic Fuel Injection (EFI)
Engine RPM	3600
Recommended Oil	10W-30 / SAE 30
Oil Capacity qt (L)	1.05 (1.0)
Lubrication Method	Pressure
Automatic Voltage Regulation (AVR)	Yes
Fuel Shut Off	On Control Panel
Starting Method	Electric Start / Recoil Pull Start
Battery Included	Yes
Battery Type	Lead Acid (12V DC, 9Ah)

Battery Part No.	0G9449
Battery Dimensions	5.94" x 2.56" x 3.70"
Battery Wall Charger Adapter	Included
Low Oil Shutdown	Yes
Neutral Bonded to Ground	Yes
Start Switch Type	Off/Run/Start
Switch Location	On Control Panel
Fuel Gauge	Built-in Tank
Fuel Tank Capacity gal (L)	8.0 (30.3)
Run Time at 50% (Hours)	9.5
Handle Style	Single Folding
Wheel Type	10" (254mm) Solid Wheels
Warranty- Residential	2 Year
Warranty- Commercial	1 Year
Included	Engine oil, oil funnel, wheel and handle kit, Controlguard™ and Owner's Manual

Dimensions and Weights

Length in (mm)	31.4 (798)
Width in (mm)	27.4 (697.1)
Height in (mm)	27.1 (687.7)
Extended Length in (mm)	47 (1193.5)
Carton Length in (mm)	33.4 (850)
Carton Width in (mm)	22.8 (580)
Carton Height in (mm)	24.8 (630)
Unit Weight lbs (kg)	216.1 (98)
Shipping Weight lbs (kg)	244.3 (110.8)

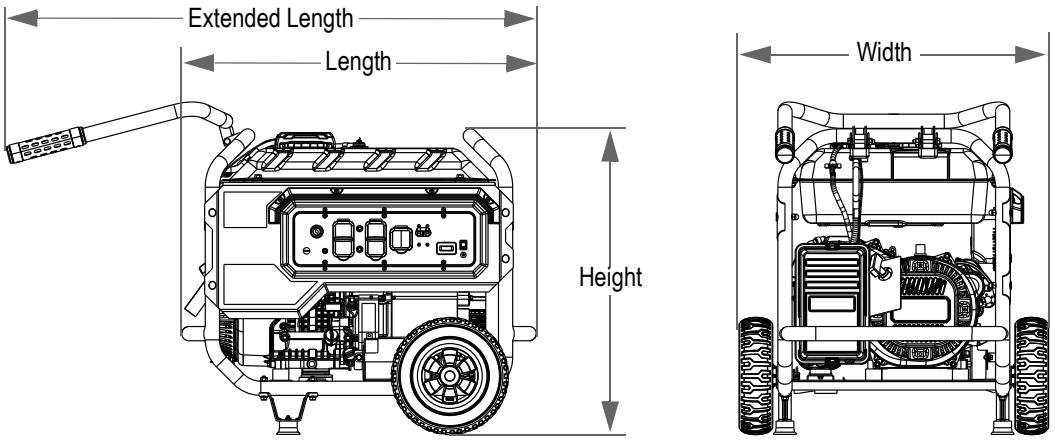

GENERAC®

Generac Power Systems, Inc. • P.O. Box 8, Waukesha, WI 53187 • generac.com
©2021 Generac Power Systems, Inc. All rights reserved. All specifications are subject to change without notice. Part No. 10000023336-C 04/12/2021