# Parts Manual

## 60 Hz Air-Cooled Generators

### 26 kW Models: G0073270 & G0073280

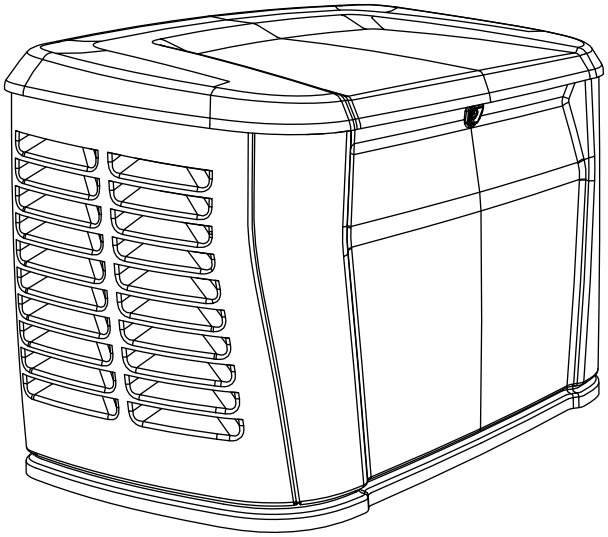

SAVE THIS MANUAL FOR FUTURE REFERENCE

**⚠ WARNING**

CANCER AND REPRODUCTIVE HARM
www.p65warnings.ca.gov

(P000393)

# Table of Contents

*Common Replacement Parts ..... 4*

*ENCLOSURE AND DECALS..... 6*

*TOP LEVEL ENG, FUEL, EXH, & ALT ..... 10*

*ENGINE SUBCOMPONENTS ..... 14*

*CONTROL SYSTEM AND LOOSE PARTS ..... 16*

## Common Replacement Parts

| Part Number | Part Description | QTY | Remarks |
|---|---|---|---|
| A0003637864 | SPARK PLUG GENERAC GAP: 0.020" | 2 ea | |
| G0072160 | KIT MAINTENANCE 13-28KW 816/817/997CC | 1 ea | |
| A0009643725 | OIL, BREAK-IN 12QT CASE SAE 5W-30 | 2.2 qt | Available in 12 qt case |
| 070185E | OIL FILTER 90 LOGO ORNG-CAN | 1 ea | |
| 0J8478S | FILTER AIR ELEMENT PRE-BOX | 1 ea | |
| 0G66240KEY | KEY FOR LOCK 0G6624 | 1 ea | Comes with A0007504626 |
| G0099180 | TOUCH-UP PAINT METRO GRAY | 1 ea | |
| A0001412864 | OIL-5W-20 FULL SYN ENG (CASE /12 QTS) | 2.2 qt | |

**This page intentionally left blank.**

# ENCLOSURE AND DECALS

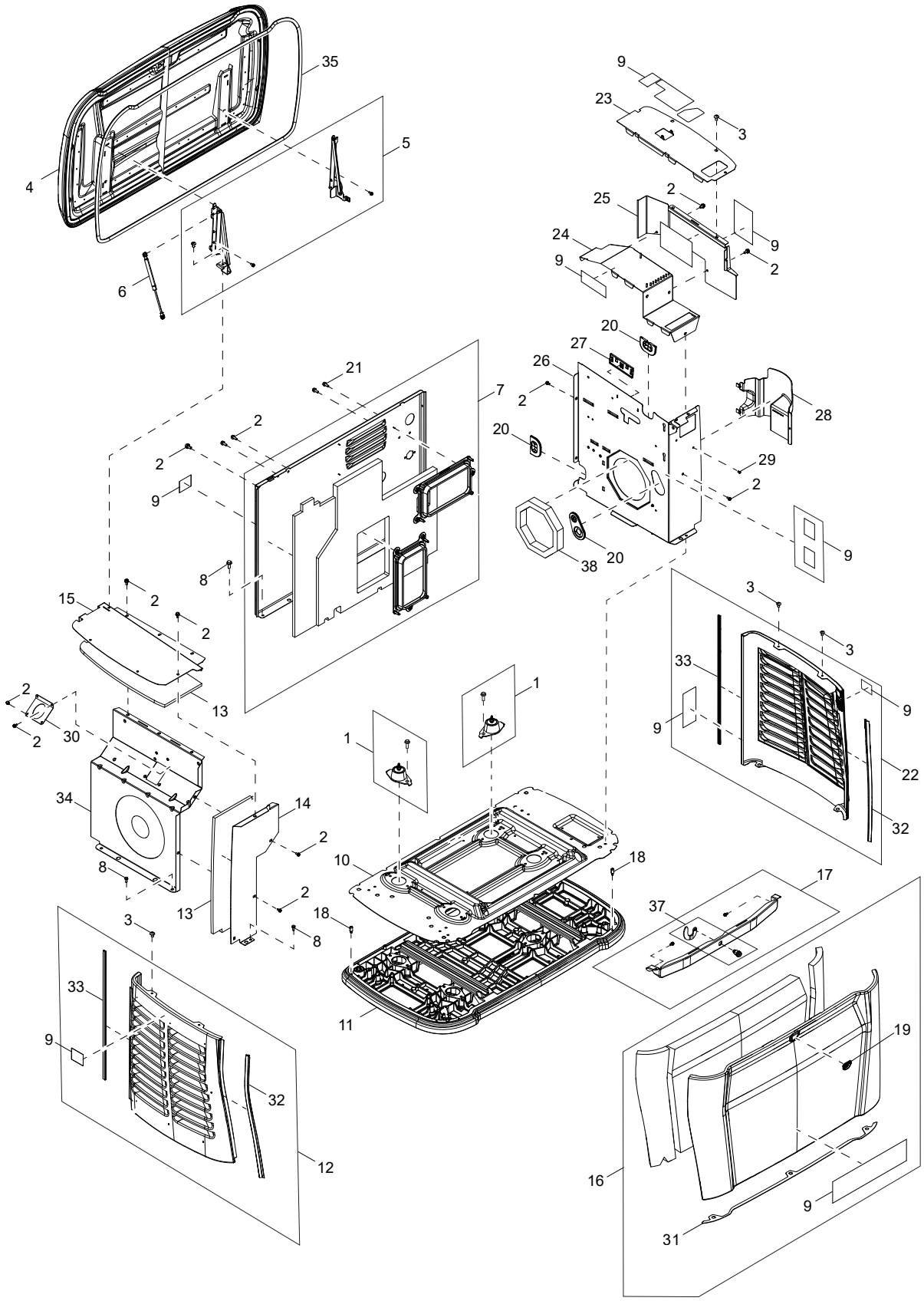

## ENCLOSURE AND DECALS (continued)

| Item | Part Number | Description | Qty. | Remarks |
|---|---|---|---|---|
| 1 | A0007645935 | KIT - MOUNTING FOOT | 4 | |
| 2 | A0004161392 | SCREW HH SERR FLG M6-1.0 X 12 ZP | 21 | |
| 3 | A0002494196 | SCREW TORX BTN M6-1.0 X 12 ZK | 5 | |
| 4 | A0007645939 | KIT - ROOF REPLACEMENT | 1 | *Item 35 is included with item 4 |
| 5 | A0008082540 | KIT - ROOF HINGE | 1 | |
| 6 | A0006008751 | STRUT GAS ROOF SUPPORT HSB | 1 | |
| 7 | A0007645941 | KIT - BACK PANEL | 1 | |
| 8 | A0004382392 | SCREW HH HI-LO M6.3 X 16MM | 8 | |
| 9 | A0007887150 | KIT - COMMON DECALS | 1 | |
| 10 | A0004201681 | GN57 BASE PANEL HSB | 1 | |
| 11 | A0006793040 | MOUNTING PAD ASSY HSB PRIME RESIN | 1 | |
| 12 | A0009134973 | KIT-EXHAUST PANEL NESTED | 1 | |
| 13 | A0009264074 | KIT-INSULATION | 1 | |
| 14 | A0004330547 | ST03 PANEL EXHAUST FRONT NARROW A | 1 | |
| 15 | A0006060342 | ST03 WELDMENT PANEL EXHAUST TOP STRUT | | |
| 16 | A0009134974 | KIT-FRONT PANEL NESTED | 1 | |
| 17 | A0007504626 | KIT - LOCK REPLACEMENT | 1 | |
| 18 | A0005204186 | SCREW TORX CUSTOM HI-LO STL ZP | 7 | |
| 19 | A0002010098 | BEZEL LOCK HSB BLACK | 1 | |
| 20 | A0007647638 | KIT - GROMMETS | 1 | |
| 21 | 10000022416 | SCREW HHFC M6-1.0 X 16 C8.8 | 2 | |
| 22 | A0009134972 | KIT-INTAKE PANEL NESTED | 1 | |
| 23 | A0005125723 | ST03 PNL TOP CUSTOMER CXN 60HZ 1PH | 1 | |
| 24 | A0006524367 | ST11 ASSY PNL BTTM CUSTOMER CXN EXTRUDES | 1 | |
| 25 | A0007358752 | ST03 WLDMT PANEL SIDE CUST CONNECTION | 1 | |
| 26 | A0004543048 | ST03 PANEL ENGINE DIVIDER HSB | 1 | |
| 27 | A0001055848 | BRACKET DUAL RELAY | 1 | |
| 28 | A0006634851 | BAFFLE ENGINE FAN HSB | 1 | |
| 29 | 0G7717 | SCREW HH HI-LO M6.3 X 10MM | 2 | |
| 30 | A0004520123 | GASKET EXHAUST PANEL HSB | 1 | |
| 31 | A0007205196 | GASKET FRONT PANEL NESTED BOTTOM HSB | 1 | |
| 32 | A0006523228 | GASKET END PANEL FRONT SIDES HSB | 2 | |
| 33 | A0008186350 | GASKET EXTRUDED TRIM RIBBED UL | 2 | |
| 34 | A0004330536 | ST03 WLDMNT PNL EXH DIVIDER 315 LONG A | 1 | |
| 35 | A0001380433 | GASKET EXTRUDED TRIM UL | 10.8 ft | Item 35 is included with item 4 |
| 36 | A0004332724 | HARN GND LEAD AC HSB 6AWG | 1 | Item not shown |

## ENCLOSURE AND DECALS (continued)

| Item | Part Number | Description | Qty. | Remarks |
|---|---|---|---|---|
| 37 | A0010204639 | KIT - LOCK ASSY | 1 | |
| 38 | A0001034596 | FOAM ENGINE DIVIDER HSB 816/999 | 1 | |

**This page intentionally left blank.**

# TOP LEVEL ENG, FUEL, EXH, & ALT

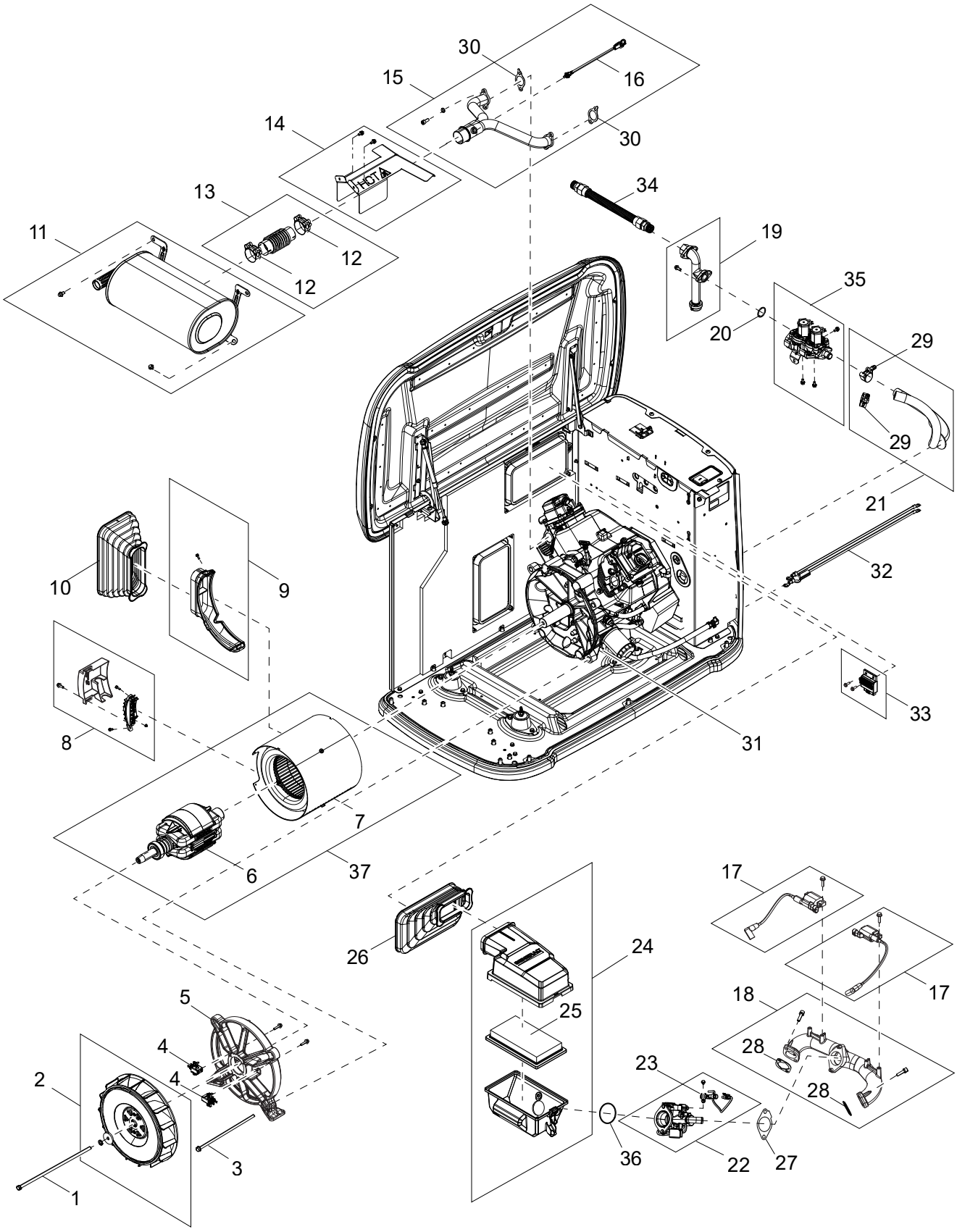

## TOP LEVEL ENG, FUEL, EXH, & ALT (continued)

| Item | Part Number | Description | Qty. | Remarks |
|---|---|---|---|---|
| 1 | 0G7408 | SCREW IHHC 3/8-24 X 17.50 G8 | 1 | Item1 is included with item 37 |
| 2 | A0007649832 | KIT - EXHAUST FAN | 1 | |
| 3 | A0004533859 | SCREW HHFC M8-1.25 X 393 C8.8 | 4 | |
| 4 | A0007649806 | KIT - BRUSH ASSY | 1 | |
| 5 | A0004330206 | 315 REAR BEARING CARRIER MACHINED | 1 | |
| 6 | A0004123472 | RTR 2P315 26 AD2 | 1 | |
| 7 | A0001766394 | STR 2P315 26 AD2 | 1 | |
| 8 | A0008847463 | KIT-SHIELD AND HARN TERMINAL ASSY | 1 | |
| 9 | A0009263558 | KIT-ALT EXH DUCT | 1 | |
| 10 | A0002500762 | BELLOWS ALT INTAKE HSB | 1 | |
| 11 | A0007325185 | KIT - MUFFLER | 1 | Includes 1x item 13 for re-installation |
| 12 | 0J7240 | CLAMP BAND DIA 42.7-46.7MM | 2 | |
| 13 | A0007325187 | KIT - EXHAUST FLEX PIPE | 1 | This item is not reusable and must be replaced upon removal |
| 14 | A0007325192 | KIT - FLEX PIPE COVER | 1 | |
| 15 | A0007649031 | KIT - EXHAUST MANIFOLD | 1 | Includes1x item 13 for re-installation |
| 16 | A0002057615 | SENSOR OXYGEN SWITCHING | 1 | |
| 17 | A0007674973 | KIT-IGN COIL ASSY | 2 | |
| 18 | A0007676181 | KIT-INTAKE MANIFOLD ASSY | 1 | |
| 19 | A0007887144 | KIT - SEDIMENT TRAP | 1 | |
| 20 | A0006853913 | O-RING 29.82 ID X 2.62MM | 1 | |
| 21 | A0007887145 | KIT - FUEL LINE | 1 | |
| 22 | A0007649028 | KIT - ETC / MIXER | 1 | |
| 23 | A0007649029 | KIT - MIXER PRES SENSOR | 1 | |
| 24 | A0008201357 | KIT - AIRBOX REPLACEMENT | 1 | |
| 25 | 0J8478 | FILTER AIR ELEMENT 236X139X37 | | |
| 26 | A0001455554 | BELLOWS 816/999 ENGINE INTAKE HSB | 1 | |
| 27 | A0006060389 | GASKET-MIXER/ETC TO INTAKE | 1 | |
| 28 | A0002074537 | GASKET INTAKE 999CC | 2 | |
| 29 | A0002872809 | T-BOLT HOSE CLAMP 28-32MM | 2 | |
| 30 | 0C4138 | GASKET EXHAUST PORT | 2 | |
| 31 | A0009741783 | KIT-ENGINE REPLACEMENT 3PH 26-28KW ACHSB | 1 | Contains items 13, 28, 27, 30, and 36 and intends to capture all parts needed to reinstall the replacement engine. |
| 32 | A0007647636 | KIT - BATTERY LEADS | 1 | |
| 33 | A0007647702 | KIT - REGULATOR ASSY | 1 | |

## TOP LEVEL ENG, FUEL, EXH, & ALT (continued)

| Item | Part Number | Description | Qty. | Remarks |
|---|---|---|---|---|
| 34 | 0L4836A | FUEL LINE FLEX 3/4 NO PVC | 1 | |
| 35 | A0007887141 | KIT - FUEL SHUTOFF | 1 | |
| 36 | A0001227957 | O-RING 61.60 ID X 2.62MM ISO-143 | 1 | |
| 37 | A0008625458 | KIT - ALTERNATOR ASSEMBLY | | Item 1 is included with item 37 |

**This page intentionally left blank.**

# ENGINE SUBCOMPONENTS

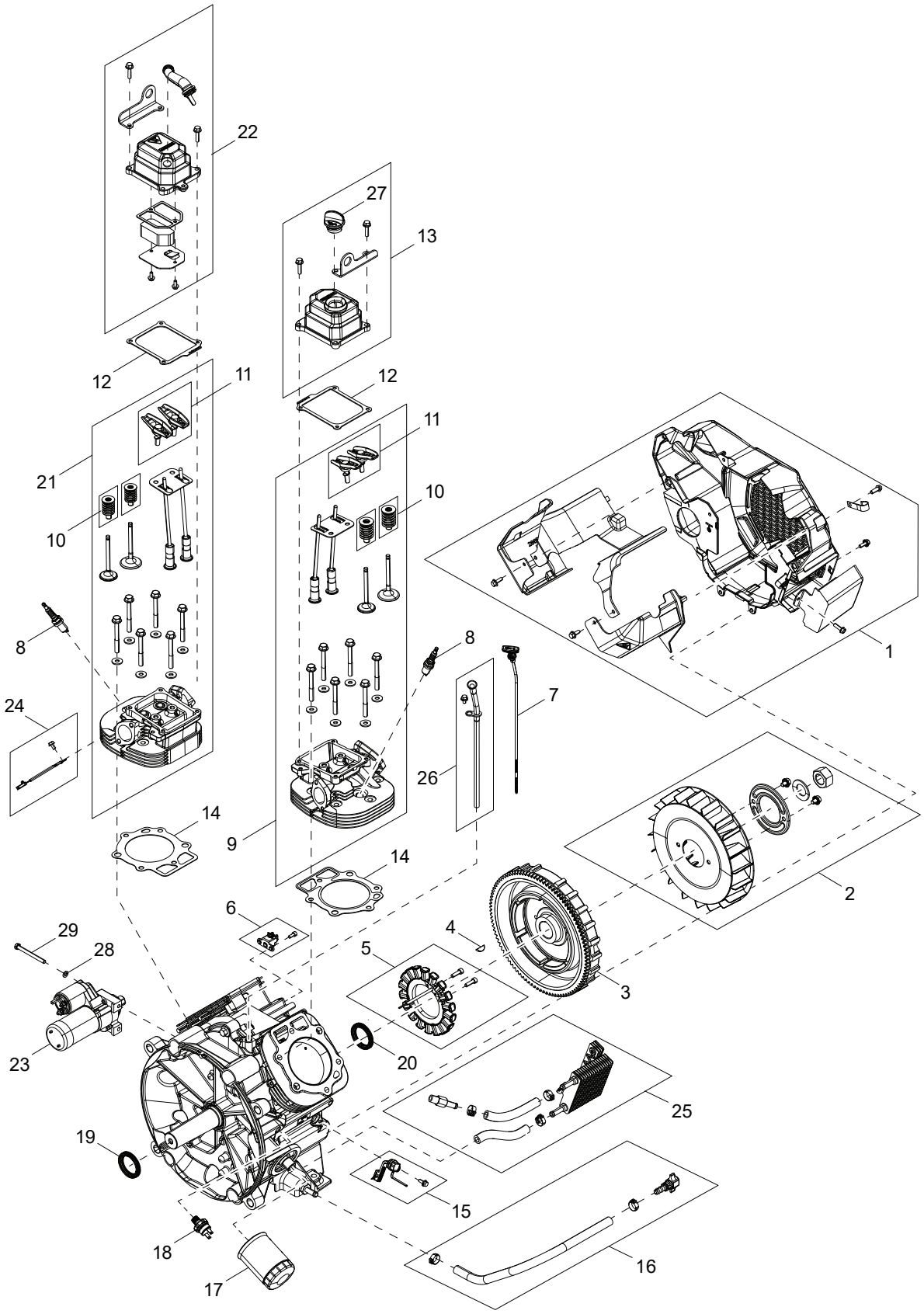

## ENGINE SUBCOMPONENTS (continued)

| Item | Part Number | Description | Qty. | Remarks |
|---|---|---|---|---|
| 1 | A0007674982 | KIT-BLOWER HOUSING | 1 | |
| 2 | A0007676172 | KIT-FAN | 1 | |
| 3 | 10000022639 | FLYWHEEL/RING GEAR 255MM FOR EFI | 1 | |
| 4 | 10000022810 | KEY WOODRUFF 5 X 22 | 1 | |
| 5 | A0007674953 | KIT-BATTERY CHARGE STATOR | 1 | |
| 6 | A0007676178 | KIT-CRANK POSITION SENSOR 997 | 1 | |
| 7 | A0007060963 | ASSY DIPSTICK 355.7MM | 1 | |
| 8 | A0003637864 | SPARK PLUG GENERAC GAP: 0.020" | 2 | |
| 9 | A0007676179 | KIT-CYLINDER HEAD #2 997 | 1 | |
| 10 | A0008095272 | KIT-SPRING REPLACEMENT | 4 | |
| 11 | A0009205358 | KIT-ROCKER ARM AND STUD | 4 | |
| 12 | A0002791673 | GASKET ROCKER COVER 80MM X 91MM | 2 | |
| 13 | A0007676183 | KIT-ROCKER COVER WO BREATHER | 1 | |
| 14 | 0C2978 | GASKET CYLINDER HEAD GTV990 | 2 | |
| 15 | A0007674961 | KIT-OIL FLOAT ASSY | 1 | |
| 16 | A0007676175 | KIT-OIL DRAIN ASSY | 1 | |
| 17 | 070185E | OIL FILTER 90 LOGO ORNG-CAN | 1 | |
| 18 | 0L2917D | LOW OIL PRES SWITCH 10 PSI NO | 1 | |
| 19 | 0K2035 | SEAL CSHFT PTO 760/990 RED | 1 | |
| 20 | 0K1534 | SEAL CRANKSHAFT FLYWHEEL SIDE | 1 | |
| 21 | A0007676186 | KIT-CYLINDER HEAD #1 997 | 1 | |
| 22 | A0007676187 | KIT-ROCKER COVER W BREATHER | 1 | |
| 23 | A0000501971 | STARTER MOTOR GEAR REDUCED 1KW | 1 | |
| 24 | A0007676180 | KIT-HEAD TEMP SENSOR | 1 | |
| 25 | A0007676188 | KIT-ENGINE OIL COOLER | 1 | |
| 26 | A0009183844 | KIT-DIPSTICK TUBE ASSY | 1 | |
| 27 | A0007093192 | ASSY CAP OIL FILL M30 | 1 | |
| 28 | G022129 | WASHER LOCK M8-5/16 | 2 | |
| 29 | G061906 | SCREW HHC M8-1.25 X 85 C8.8 | 2 | |

# CONTROL SYSTEM AND LOOSE PARTS

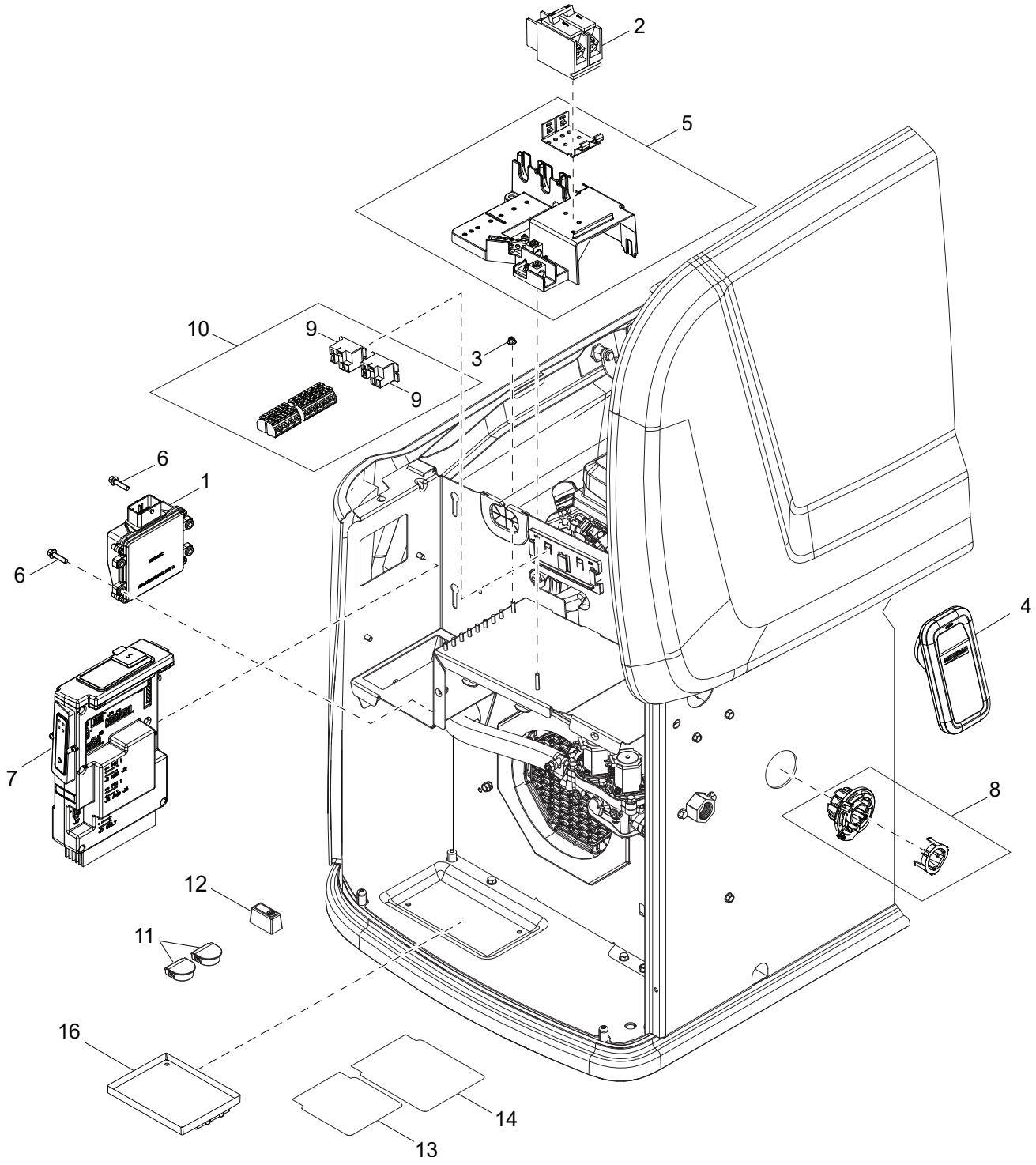

## CONTROL SYSTEM AND LOOSE PARTS (continued)

| Item | Part Number | Description | Qty. | Remarks |
|---|---|---|---|---|
| 1 | A0000697882 | ENGINE CONTROL MODULE-46 PIN GASEOUS | 1 | |
| 2 | 0E7886L | CB 0080A 2P 240V S BQ2 LB | 1 | |
| 3 | 0H3535 | NUT FLANGE M5-0.8 NYLOCK | 9 | |
| 4 | A0004175700 | CELLULAR (NON-KIT) 12V LC | 1 | |
| 5 | A0007504510 | KIT - CUSTOMER CONNECTIONS | 1 | |
| 6 | 0G3111 | SCREW HHTT M6-1.0 X 25 ZINC | 2 | |
| 7 | A0008668800 | KIT-CONTROLLER REPLACEMENT | 1 | |
| 8 | A0007504667 | KIT-MOUNTING | 1 | |
| 9 | 0K2098 | RELAY 12V 30A SPST PILOT DUTY | 2 | |
| 10 | A0007261931 | HARN AC HSB PZ200 SSI 60HZ 817/997 2BP | 1 | |
| 11 | A0008224796 | PLUG BACK PANEL HSB RIBBED | 2 | |
| 12 | A0006221871 | BATTERY POST COVER RED + | 1 | |
| 13 | 0J6153 | DECAL WARN THROUGH CONDUCTORS | 1 | |
| 14 | 0J5765 | DECAL SERVICE ENTRANCE WARNING | 1 | |
| 15 | A0004957116 | HARN STATOR LEADS AC HSB 1P 254 8AWG | 1 | Item not shown |
| 16 | G00735230 | KIT - BATTERY TRAY 30L | 1 | |

Part No. A0008869508 Rev. C 07/03/2026
© 2026 Generac Power Systems, Inc.
All rights reserved.
Specifications are subject to change without notice.
No reproduction allowed in any form without prior written consent from Generac Power Systems, Inc.

Generac Power Systems, Inc.
S45 W29290 Hwy. 59
Waukesha, WI 53189
1–888–GENERAC (1–888–436–3722)
www.generac.com